KRT2

VHF Communication Transceiver

Standard, Landscape, Portrait

Part No 285942 = KRT2-S (Standard)
Part No 285945 = KRT2-L (Mini Landscape)
Part No 286048 = KRT2-P (Mini Portrait)
Part No 285946 = KRT2-RC (Remote Control)

Operation- and Installation Manual

Record of Revisions

Revision	Date	Chapter(s)	Topic
0100	24.03.2017	all	Initial Release
0101	16.01.2018	6.3, 7.1	FCC supplements, chap. 7.1 (periodic maintenance) amended

Table 1: Record of Revisions

Service Bulletins (SB)

Service Bulletins must be inserted in the manual and added to this table.

No SB	No Rev.	Release date	Date added	Name

Table 2: Service Bulletins

Table of Contents

Record of Revisions 2
Service Bulletins (SB) 3
1. GENERAL 7
1.1 Symbols 7
1.2 Acronyms 7
1.3 Customer Service 8
1.4 KRT2 Transceiver properties 8
2. Installation limitation 9
2.1 Installation 9
2.2 Aircraft Radio 9
2.3 Quantitative safety objective identification 9
2.4 Deviations 9
3. CONTROL general 10
3.1 Control elements overview 10
3.2 Display 14
3.3 Menu levels 15
3.4 Self-test error reports 15
4. OPERATION 16
4.1 General 16
4.2 ON / OFF switching 16
4.3 Frequency selection 17
4.3.1 Direct frequency selection 17
4.3.2 Frequency selection from favourites list 18
4.3.3 Storing and editing favourites 18
4.4 AUD – Audio menu 20
4.4.1 VOL – Volume 20
4.4.2 SQ – Squelch 20
4.4.3 VOX – Intercom voice trigger level setting 21
4.4.4 Manual Intercom 21
4.4.5 TXm – PTT switch selection 21
4.4.6 INT – Intercom volume 22
4.4.7 EXT – External audio input volume 22
4.4.8 DIM – Display brightness 22
4.4.9 BAT – Battery test 23
4.4.10 SIT – Side tone 23
4.4.11 MIC – Setup 23
4.4.12 Menu lock 25
4.5 DUAL watch 26
4.6 Transmitter Operation 27
4.6.1 Two PTT configuration 28
4.6.2 Self-Test monitor 28
4.6.3 Optical side tone 28
4.7 Resetting to factory settings 29
4.8 SET UP - Menu 29
4.8.1 ERASE – erasing of favourites list 30
4.8.2 Channel spacing 30
5. Remote Control 31
6. Installation 32
6.1 Installation hints 32
6.2 Telecommunication data 32

6.3 FCC related issues ... 33
6.3.1 Radiofrequency radiation exposure Information: ... 33
6.3.2 Note: ... 33
6.3.3 Compliance ... 33
6.3.4 Modifications ... 33
6.4 Scope of delivery ... 34
6.5 Unpacking and inspecting the equipment ... 34
6.6 Mounting ... 34
6.7 Electrical connections ... 34
6.7.1 Microphone connection ... 35
6.7.2 Speaker & open microphone: ... 36
6.7.3 Earphone connection ... 36
6.7.4 External audio input ... 36
6.7.5 Speaker connection ... 36
6.8 Final audio setup ... 37
6.8.1 For glider flights ... 37
6.8.2 For motor gliders dual seaters ... 37
6.8.3 For motor planes ... 37
6.9 Wiring ... 38
6.9.1 Wire Gauges ... 38
6.9.2 Connector Pin-Configuration ... 38
6.9.3 General hint ... 39
6.9.4 Wiring diagrams ... 40
6.9.5 Wiring for dynamic microphones ... 46
6.9.6 Connection support ST1 mating connector ... 46
6.10 Antenna ... 47
6.10.1 Antenna selection ... 47
6.10.2 Installation recommendation ... 47
6.11 Microphone general ... 48
6.12 Post-Installation Check ... 48
6.13 Starting Up ... 49
6.14 Accessories ... 49
6.15 Drawings ... 49
6.15.1 Dimensions ... 49
6.15.2 Installation directions ... 51
7. Maintenance ... 52
7.1 Periodic Maintenance ... 52
7.2 Repair ... 52
7.3 Cleaning ... 52
8. ANNEX ... 53
8.1 Frequency / channel - schedule ... 53
8.2 Technical Data ... 54

List of Figures

Figure 1: KRT2-S Front View ... 10
Figure 2: KRT2-P front view ... 11
Figure 3: KRT2-L front view ... 12
Figure 4: KRT2 active & standby frequencies ... 26
Figure 5: KRT2 TX & RX operations ... 27
Figure 6: Headsets ... 35
Figure 7: Connector pinout ... 38
Figure 8: Remote control pinout ... 38

Figure 9: KRT2 connection support layout 1 46
Figure 10: KRT2 connection support layout 2 47
Figure 11: KRT2-S Dimensions....49
Figure 12: KRT2-P, KRT2-L dimensions 50
Figure 13: KRT2-RC remote control dimensions 50
Figure 14: KRT2-S panel cutout....51
Figure 15: KRT2-P, KRT2-L panel cutout....51

List of Tables

Table 1: Record of Revisions 2
Table 2: Service Bulletins....3
Table 3: Acronyms 7
Table 4: KRT2 Controls....13
Table 5: KRT2 Display 14
Table 6: KRT2 Menu Levels....15
Table 7: KRT2 Built In Tests (BIT) 15
Table 8: KRT2 Menu Lock 25
Table 9: Telecommunication data 32
Table 10: Scope of delivery....34
Table 11: Frequencies 53
Table 12: Technical Data General....54
Table 13: Technical Data Transmitter 55
Table 14: Technical Data Receiver 55

1. GENERAL

This manual contains information about the physical, mechanical and electrical properties as well as a description for the operation and installation of the VHF airborne transceiver KRT2.

1.1 Symbols

	WARNING Non-compliance may cause personnel injury due to radiation or fire.

	CAUTION Non-compliance may cause damage or incorrect operation of the transceiver.

	INFORMATION

1.2 Acronyms

Abbreviation	Description	Definition
BAT	Battery (Electrical)	Check DC source
DIM	Dimming	Display brightness setting
EXT	Exterior / External	External Audio input level setting
INT	Intercom level	Intercom volume level setting
PTT	Push-To-Talk	Transmitter activation
RC	Remote control	KRT2-RC remote control for KRT2
SQ	Squelch	Squelch setting
VOX	Voice operated intercom	Voice level setting for intercom activation

Table 3: Acronyms

1.3 Customer Service

In order to process returned units most expeditiously, please use the email support.krt@tq-avionics.com on the website www.tq-avionics.com

	Suggestions which will improve this manual are very much appreciated at: info@tq-avionics.com.

	Information concerning software updates is available under support.krt@tq-avionics.com.

1.4 KRT2 Transceiver properties

- VHF airborne transceiver
- Frequency range 117.975 to 137.000 MHz
- Channel spacing 8,33 / 25 kHz (2278 channels)
- Fast channel selection
- 2 separate microphone inputs (standard or dynamic)
- Audio-input for other audio devices
- Installation: Standard panel cut-out (57 mm)
- Integrated Intercom
- 100 user definable frequencies with up to 8 character/spaces identifiers

	Continuous transmissions will be turned off after 2 minutes. (Stuck microphone function)

2. Installation limitation

The conditions and tests required for (E)TSO approval of this article are minimum performance standards. It is the responsibility of those installing this article either on or within a specific type or class of aircraft to determine that the aircraft installation conditions are within the (E)TSO standards. (E)TSO articles must have separate approval for installation in aircraft.

2.1 Installation

For installation hints, data, electrical connections and mounting instructions please see section 6 “Installation”.

2.2 Aircraft Radio

The KRT2 was designed as a closed unit for installation in a cockpit environment of the general aviation with the following limitations:

Installation must be in accordance with the applicable EASA or FAA requirements.
The classification of the software approval is suitable for aircraft type.

The failure classification identified in accordance with FAA AC 23.1309-1D is:

MINOR

The Software level is:

LEVEL D

2.3 Quantitative safety objective identification

In accordance with EASA regulations, the goal is a safety objective for the VHF COM radio in the KRT-2 VHF Communication Transceiver System of 1 x 10E-4 per flight hour for Class I airplanes and 1 x 10E-5 per flight hour for Class II Airplanes.

2.4 Deviations

None

3. CONTROL general

3.1 Control elements overview

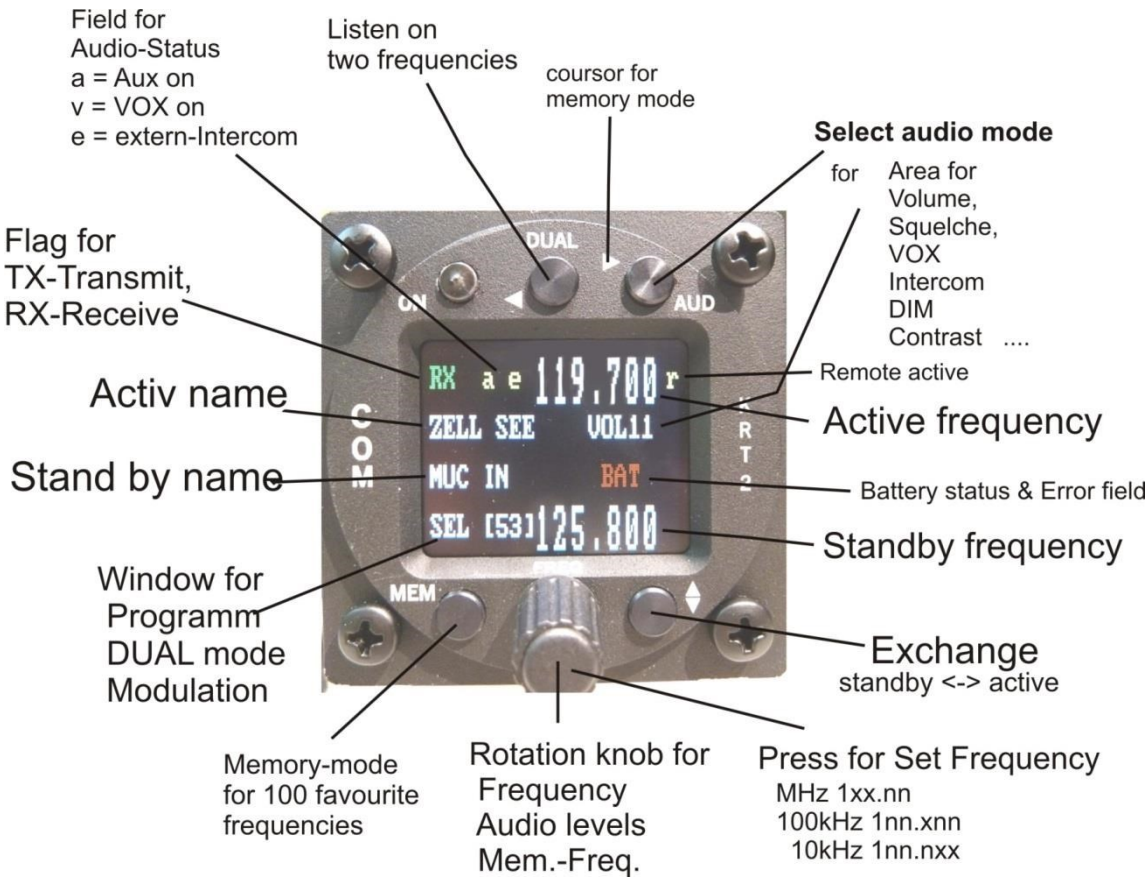

Figure 1: KRT2-S Front View

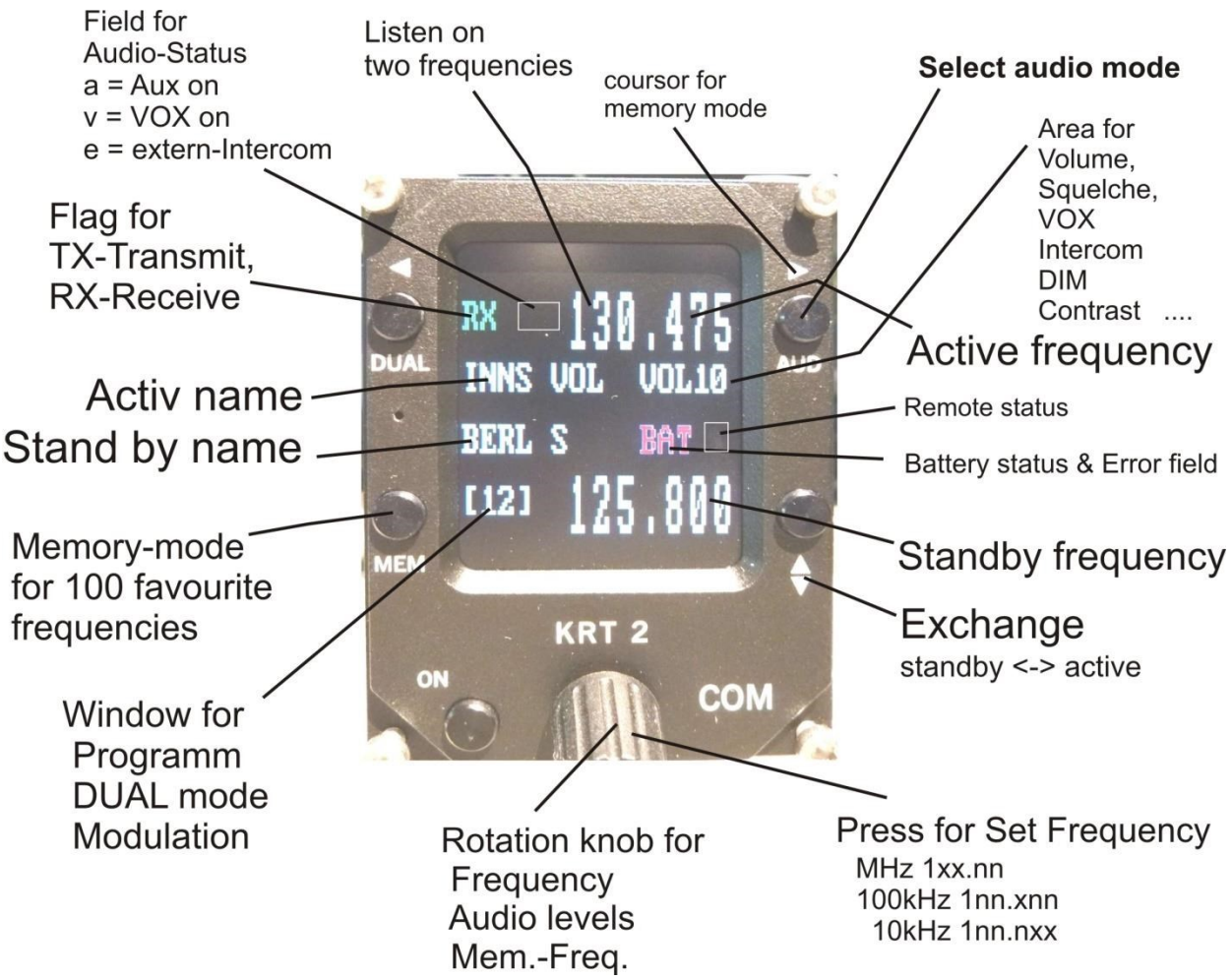

Figure 2: KRT2-P front view

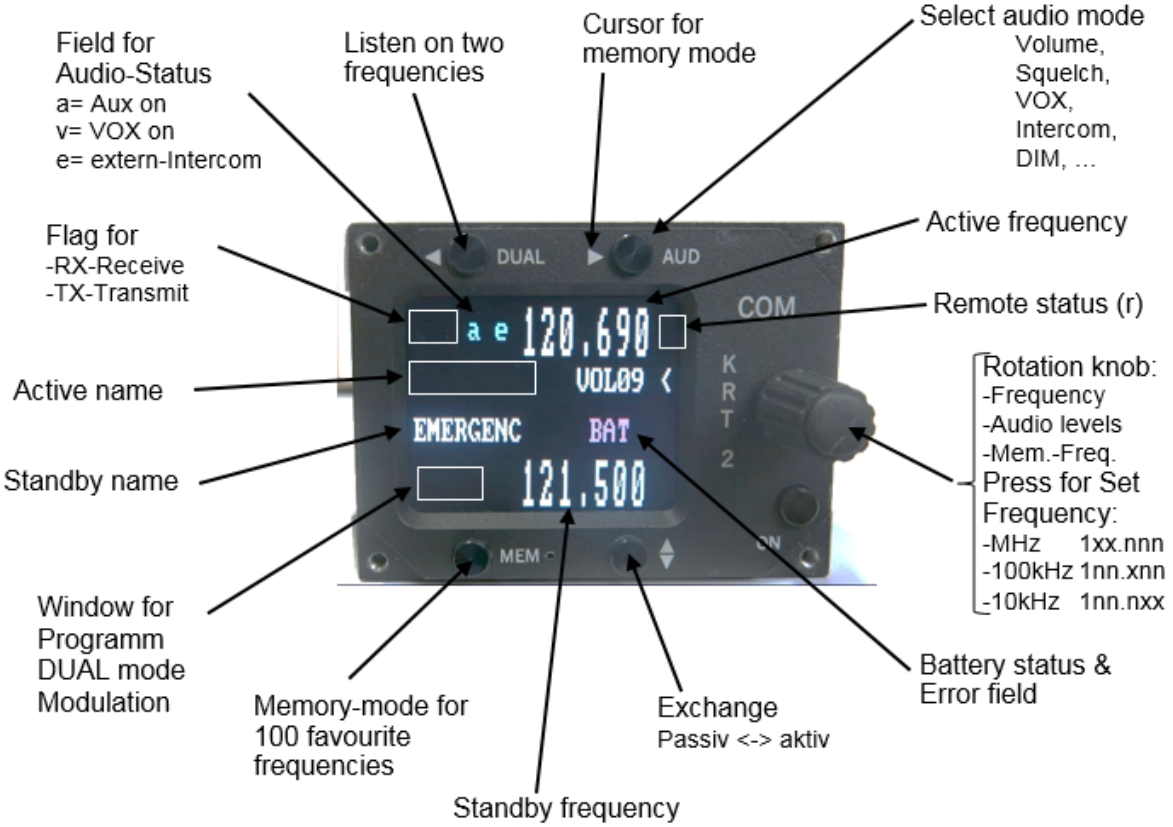

Figure 3: KRT2-L front view

All functions and performances of the normal size unit (57mm round) and the Portrait format (Mini) are identical.

The only differences are the text areas on the display Compare Figure 2: KRT2 Front view and Figure 3: KRT2 Mini Front view for more details.

Button	Function	Usage
	ON / OFF	Self-locking switch
	DUAL WATCH	1. Scanning between the Active and Standby frequencies 2. Positioning cursor to the left when programming the station identifier
	AUDIO SELECT	1. Stepping through the audio menus 2. VOL SQ VOX TX INT EXT DIM CON SIT and MIC 3. Positioning cursor to the right when programming the station identifier
	FAVORITES	1. Frequency and identifier selection from the favourites list 2. Programming of favourites (frequency and identifier)
	EXCHANGE	Exchange of the Active and Standby frequencies
	TURNING KNOB	Pressing for Selection of the frequency range to: MHz, 100kHz, 10kHz Toggles between frequency and identifier when programming the favourites Sets all variable values in any menu • Volume setting of headsets and speakers • MHz/kHz selection of the standby • frequency in 3 different ranges • Favourite selection • Alpha character selection when programming favourites • Change of microphone settings

Table 4: KRT2 Controls

3.2 Display

Indication	Meaning	Remark
RX	Reception	RX is displayed during reception (squelch opened)
TX	Transmission	Transmitter operates normally
Te	Transmitter was turned off automatically after 2 min continuous operation	
119.700	Frequency	
ZELL SEE	Frequency station identifier	Displayed when frequency and identifier are stored in the favourite list
MUC IN	Standby frequency station identifier	Displayed when frequency and identifier are stored in the favourite list
VOL ……	Receiver volume level (default after a certain time delay)	When AUD is pressed the corresponding Audio Menu item and setting is displayed
DUAL	DUAL function is activated	DUAL function is deactivated by DUAL, FREQ or MEM
[03] (MEM)	Favourite list index (0-99)	When frequency and identifier are stored at this index ex:[03] they are displayed
125.100 upper	Active frequency	Displayed in large fonts.
125.800 lower	Standby/DUAL - frequency	Displayed in large fonts.
<	The pointer indicates what the turning knob will change VOL SQ VOX…..etc. Standby frequency	Arrow is positioned according to the button pressed (AUD or FREQ)
BAT	Supply voltage is low <10,5V	Low or defective battery / generator.
A-match	Antenna error	Bad antenna match
a v e	Status of certain Audio menu functions	a = AUX. Input active v = VOX active e = external Intercom switch active

Table 5: KRT2 Display

3.3 Menu levels

Displayed	Signification	Remark
VOL	Volume	Default
SQ	Squelch	
VOX	Voice operated	Voice operated intercom
DIM	Display brightness	
BAT(tst)	DC source check	
INT	Intercom - Volume	
EXT	Volume of external devices	
TX(m)**	PTT button selection	Left/Right/Both
SIT	Side tone	During transmitter operation
MIC	Setup-Menu for Microphones	Service-Menu without radio opera-tion.

Table 6: KRT2 Menu Levels

3.4 Self-test error reports

Display	Meaning	Remark
Er_PLL	Internal error, no transmission	Return the transceiver for maintenance
Er_ADC	Internal error, operation limited	Return the transceiver for maintenance
Er_FPA	Internal error; unit not usable	Return the transceiver for maintenance
Er_I2C	Internal error; unit not usable	Return the transceiver for maintenance
Er_D10	Internal error; reception corrupt	Return the transceiver for maintenance
Error_3V3	Internal error; unit not usable	Return the transceiver for maintenance
Key_Block	Internal error; unit not usable	Return the transceiver for maintenance

Table 7: KRT2 Built In Tests (BIT)

4. OPERATION

4.1 General

In the normal operating mode in which the turning knob always is connected to the volume (VOL).
The normal operating mode can be left by pressing the AUD, FREQ or MEMORY button.

When not in the normal mode and there is no pilot action for more than 10 seconds the unit returns to the normal mode.

4.2 ON / OFF switching

ON / OFF switching is done by pushing the self-locking switch.

After power up the following display will be displayed:

Device-name
KRT2

Software Version e.g. V8.6

(Example)

The unit starts in the normal operating mode using and displaying the data last used.

4.3 Frequency selection

There are two different frequency selection methods:

- Direct Input
- Selection from the favourite list (index 0-99)

4.3.1 Direct frequency selection

The Standby-Frequency is set with the turning knob in 3 different ranges. The selected range is highlighted and can be changed with the FREQ button. Frequency ranges are:

1xx.nnn

1nn.xnn

1nn.nxx

Press the FREQ button once or several times until the desired frequency range is highlighted. The unselected digits are displayed as dotted digits.

When the pointer is not next to the Standby Frequency window, it will be repositioned with the first pressing of the FREQ button.

Exchanges the Active and Standby frequencies.

When the Exchange button is not pressed, the Standby frequency display will return to its normal appearance after 20 seconds.

4.3.2 Frequency selection from favourites list

By pressing

and operating the turning knob a specific favourite list position can be accessed [xx] (xx = index 0 … 99). When frequency and station identifier have been defined, they will be displayed in the Standby and station identifier windows.

The favourite identifiers list can be sorted in alphabetic order (see 4.3.3 Storing and Editing Favourites).

To exit this menu, press the key.

The selection procedure can be terminated with either the AUD or FREQ buttons. Without pressing any of these buttons the unit will return to its normal operating mode after about 15 seconds.

4.3.3 Storing and editing favourites

Any displayed Standby Frequency can be associated with an identifier and both can be stored as favourites in the favourite list. The frequency and identifier of a favourite can be edited.

First press the

button and go to the desired favourite list position to be edited using the turning knob (index [00 …99]).

Press the MEMORY button a second time and „–EDIT--„ will show up in the program window.

In the identifier window a blinking cursor will show up under the extreme left character.

The turning knob selects the desired character.

The AUD button positions the curser one character to the right. The DUAL button positions the cursor one character to the left and simultaneously erases this character.

The station identifier can consist of a maximum of 8 characters/spaces.

To change frequency just press the FREQ button and follow the normal direct input procedure to edit the frequency, see “4.3.1 Direct Frequency Selection”.

To quit the frequency input press the MEMORY button again in order to go to the station identifier window for editing the identifier if required. Using the buttons FREQ and MEMORY it is possible at any time to toggle between identifier and frequency inputs.

Keep in mind the watch dog timer which will terminate the input mode after 15 sec.

Termination and Save

To save the entered identifier, press the key as the cursor is on the station name, “SAVE” will appear and the system will go back to the favourite selection.

A **sorting process** can be activated by pressing the “MEM” button again from the EDIT-mode.

“SORT?” will be displayed for 20 seconds and it should be activated with or skipped with “MEM”.
When activated all 99 favourites will be sorted in alphabetical order and the process can take several minutes.

During the sorting procedure “RUN nn“ is displayed in the program window, with nn being the running index.
After a 6 seconds time out or by ending the sort, the transceiver resumes its normal operating mode.

When the “MEM” button is pressed at the time “RUN nn“ is displayed, the sorting procedure is terminated. The favourite list is then partially sorted and the transceiver resumes its normal operating mode.

Example:

1. Button MEM -> SEL [23] = Select location
2. Button MEM -> -EDIT- = Input of name
   Rotation knop to select the characters
   For cursor use (AUD) (DUAL)
   Frequency setting -> press rotating button
   Use button MEM to go back to -EDIT-
3. Button -> shortly SAVE -> back to 1.) (do nothing = cancelling)
4. Button MEM -> question for “SORT?” Yes = , No = MEM or do nothing.

If the function is abandoned before completion, it will be exited after a 6 seconds time out with no activity. The data will not be saved.

4.4 AUD – Audio menu

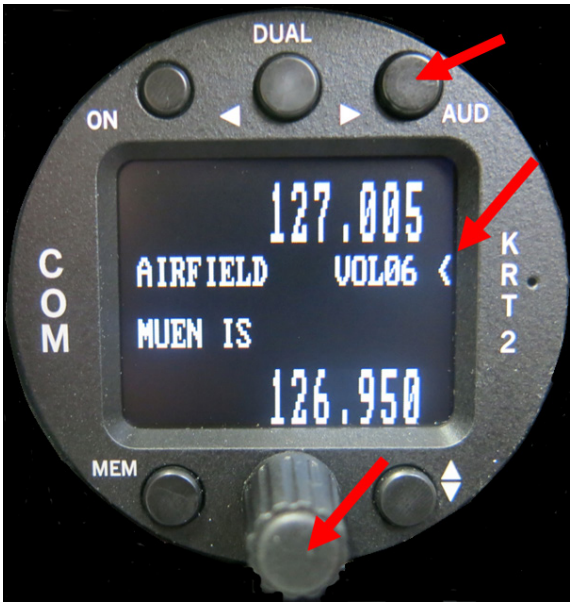

Any action in the Audio Menu requires the pointer (<) to be next to the Audio menu window (see picture). When the pointer is next to the Standby frequency window, the pointer can be repositioned by pressing the AUD button once.

VOLnn is the Audio menu default display. No action on any control for more than 10 seconds will result in the VOLnn being displayed.

Audio Menu items can be accessed in the following order by repeatedly pressing the AUD button.

VOL (default), SQ, VOX, TXm**, INT, EXT, DIM, BATtst, SIT, MIC

4.4.1 VOL – Volume

Turning the turning knob changes the receiver volume.

VOLnn Range: 01 – 20

	The VOL setting only concerns the receiver and not the intercom system. Intercom volume values are set in the INT audio menu.

4.4.2 SQ – Squelch

Pressing the AUD button once enables the turning knob to change the squelch level values.

SQnn Value range: 01 – 10

The Squelch setting is depending on several factors.

For engine driven airplanes an initial setting of 3-5 is recommended. For gliders a setting of 2 is recommended. The lower the Squelch level value the higher is the input sensitivity. A high sensitivity setting is susceptible to noise from other sources like ignition strobe-lights etc.

	Standard SQ-level is 3...5. Higher setting will suppress weaker input signals. 01 = Squelch off, 02 = for long range. Squelch does not influence the intercom system.

4.4.3 VOX – Intercom voice trigger level setting

Pressing the AUD button twice enables the turning knob to change the voice level which triggers the intercom.

The intercom voice trigger level must be set to a value which prevents normal cockpit noise from being heard in the earphones. The intercom system should only be activated when talking at a normal voice level into the microphone.

The higher the trigger level the louder the voice must be in order to trigger the intercom system.
VOX on condition is indicated by flag “v”.
VOXnn Range: 01 – 10

	The larger the value, the louder one must speak in order to activate the Intercom connection. VOX on condition is indicated by flag “v”. For installation with loudspeakers set VOX to 10 to switch it off.

4.4.4 Manual Intercom

With cockpit loud background noise or with uncompensated microphones the Intercom can be controlled manually by using an external switch. Therefore the VOX system must be activated permanently by selecting VOX: 01.
To turn off the Intercom the talk switch (default closed) must be opened, which will be indicated by “e”.

Deactivation of the intercom is done with an opened external microphone button (Ground connection to pin 12), this is indicated with an “e” on the display.

This mode only works with a deactivated external audio input (see “4.4.7 EXT – External Audio Input Volume”).

In gliders the VOX has to be set to 10 in order to disable the speaker control.

4.4.5 TXm – PTT switch selection

Pressing the AUD button three times enables the turning knob to enable certain PTT switches.

On transmission the microphone which is related to the PTT-L/R will be enabled. The equivalent indication is TX (TXm**), TX1 (TXm*-) TX2 (TXm-*).
On transmission the PTT-L/R related microphone will be the only one activated.

TXm** *- Left / -* Right / ** Both

4.4.6 INT – Intercom volume

Pressing the AUD button four times enables the turning knob to set the intercom volume.

INTnn Range: 1 – 9

4.4.7 EXT – External audio input volume

Pressing the AUD button five times enables the turning knob to set the external audio input volume. External audio inputs can be audio alarms, voice alarms, Vario, etc. The required level is 200mVpp (6Vpp max).
Activation occurs for settings >00 and will be indicated by “a”.

- 00 = turning off,
- 01 = lowest gain without threshold
- 09 = highest gain with interference suppression threshold.

EXTnn Range: 0 - 9

4.4.8 DIM – Display brightness

Pressing the AUD button six times enables the turning knob to set the display brightness.

DIMnn Range: 01 – 16

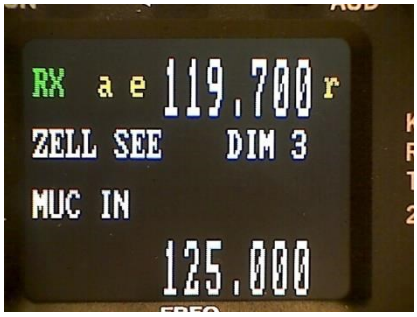

The display consumption at 12V is between 10mA und 70mA. In addition the battery voltage in Volts is indicated.

4.4.9 BAT – Battery test

Pressing the AUD button seven times enables the turning knob to display the battery voltage.

4.4.10 SIT – Side tone

Pressing the AUD button eight times enables the turning knob to set the side tone volume (for gliders has to be set to 01).

SITnn Range: 1 – 9

4.4.11 MIC – Setup

This mode is for microphone setup and test only without using the PTT. It is a service mode and it is not designed for normal operation.

Each of the two microphone input channels can be configured individually, which enables different microphone types to be used.

A maximum of two microphones of same type may be connected to each microphone input channel (see chapter 6.6.1 Microphone-Connection).

The MIC – Setup is the last item of the Audio menu and can be accessed by pressing the AUD button nine times.

By pressing the DUAL button repeatedly L, R and AUTO can be selected (Left “L” in the example).

L: Left = Left microphone.

R: Right = Right microphone.

AUT: Auto mode.

Menus L and R:

By means of the turning knob the displayed microphone input channel amplifier gain (MIC-level 01 = low gain, 09 =high gain) can be selected individually. The microphone signal level is dynamically displayed with a bar and a numeric value.

The initial MIC-level should be 0,5; the engine should be running, use a headset or earphone and speak at a normal voice level to fine-tune the MIC-level. Whenever a new MIC level is selected, the dynamic bar indicator should then be at about 50%.

Special hint:

During MIC-Setup activation, the speaker state will be taken into account (SQU on/off), if the state is active an acoustic feet-back may be heard.

The range of the MIC-level for standard microphones is 1 to 9.

MIC levels 10 and 11 are special settings for low microphone levels like dynamic micro-phones often used in gliders.

- Level 10 is used for non-amplified Electret microphones with an 8 volt supply voltage.
- Level 11 is for dynamic microphones only.

For high gain selection (> 9) the use of side tone can lead to a feedback at transmission. In that case the side tone should be set to SIT=01.

The new values will be stored upon exiting the microphone setup menu. AUTO must be selected in order to activate the AUTO menu, else use L or R to activate the Left and & Right microphone menu.

Menu Auto

In the AUTO mode only the left microphone impedance is measured. When a dynamic microphone is recognized, the left channel is switch to 11, the right channel is unaffected. When returning to the standard configuration, the original L and R values are restored.

	A simultaneous operation on Electret and Dynamic microphones is not possible (there is just one DC source for both ports). For dynamic mode this source must be turned off automatically.

The display of microphone type (lower right side) is done upon activation of the microphone menu. When an Electret microphone is recognized, the values used are the one that were saved upon leaving the menu.

The MIC submenu is terminated by pressing the AUD button.

Additional indications

Additional indications for test purposes:

- RxS : RF receiver input level (from Automatic Gain Control)
- Ext : External audio input voltage
- Mic : d (dynamic) or s (standard)

The microphone type is displayed when the microphone menu is entered.

This Symbol appears on right side of STBY Frequency in AUTO-mode if the dynamic microphone has been recognized and activated after transmission. In that case the intercom voice triggering level VOX is set to 10 (switched off).

To reactivate the intercom after a microphone change, a short press of the PTT is required.

4.4.12 Menu lock

For school operation the menus area TXm to MIC-setup can be locked.

To lock or unlock the button combination AUD & FREQ has to be pressed simultaneously for > 2 seconds.

In lock condition there will be displayed an “L” at the right end of the third line.
To store those condition the setting of SQnn should be changed before turning off.

VOL	SQ	VOX	TXm	INT	EXT	DIM	CON	SIT	MIC
Available			Locked and not available						

Table 8: KRT2 Menu Lock

4.5 DUAL watch

Because the communication transceiver KRT2 contains only one receiver, DUAL watch is achieved by alternating between the Active and Standby frequencies.

The DUAL button activates and deactivates the dual watch function. Deactivation also can take place by pressing either the FREQ or MEMORY buttons.
The frequencies to be watched should be selected prior to the DUAL watch selection.

The frequencies to be used must be selected before using dual watch and the squelch level SQ must be set to 02 or more in order to eliminate noise. Scanning Frequencies is only possible when differentiating between radio noise and radio transmissions.

	There must be radio noise suppression in order to recognize reception. The squelch level SQ must be set to 02 or higher.

When DUAL watch is activated, “DUAL“ is displayed on the lowest line. The pointer next to the DUAL display indicates the frequency on which there is reception.
The Active frequency always has priority and the receiver remains on the active frequency as long as there is reception on this frequency.
When there is no reception on both the Active frequency and the Standby frequency the receiver scans both frequencies 5 times per second.

When reception is detected on the Active frequency the reception on the standby frequency is interrupted until the end of the reception.

When a reception is detected on the Standby frequency the receiver stays on the Standby frequency, however it switches to the Active frequency every 2 seconds for a duration of 0.3 seconds. If a signal is detected on the active frequency the reception will be switch to that frequency.
The pointer next to the DUAL display indicates on which frequency there is reception.

Figure 4: KRT2 active & standby frequencies

Standby and Active frequencies can be exchanged when in the DUAL mode. The transmitter operates on the Active frequency only.

Summary:

- Select the Standby frequency to be monitored in addition to the active frequency.
- With the AUD button and turning knob set SQnn to 2 or higher.
- With the DUAL button activate the DUAL watch function.
- When there is no reception on both the Active frequency and the Standby frequency the receiver scans both frequencies.
- When scanning the Active frequency always has priority.
- Deactivate the DUAL watch function with the DUAL, FREQ or MEMORY buttons.

4.6 Transmitter Operation

The unit transmits on the active frequency (upper line) as long as a PTT (press to talk) switch is pressed.

Transmission

Reception

Figure 5: KRT2 TX & RX operations

“TX“ indicates normal transmitter operation.
“RX“ indicates a receiver operation.

In the lower left corner of the display the carrier modulation is dynamically displayed. It corresponds to the side tone which is not available on gliders when no earphones are in use.

In order to avoid the blocking off of the frequency by unintentional long transmissions (stuck microphone) the transmitter is switched off after two minutes and the display changes from „TX“ to „Te“. To resume transmission the PPT switch first must be released and then be pressed again.

While transmitting the external audio input will be turned off automatically and the microphone input, selected during the pre-setting in the TXm-menu, will be selected.

The differential speaker output will be turned off to prevent an audio feedback to the microphone. For the same reason; the speaker is turned off when the intercom (VOX) is active.
The output for the headset will carry the side tone.

4.6.1 Two PTT configuration

There are two different PTT assigned for each of the left and right side microphones. This enables the deactivation of the unused one preventing additional noise and unintentional talking on transmission.

In case there is just one PTT and multiple headsets in use both the PTT-L and PTT-R must be tied together, see chapter “4.4.5 TXm – PTT Switch Selection”.

4.6.2 Self-Test monitor

Software diagnostics operate continuously in the background in order to test the system.

The field for battery status & error (see Control Elements Overview) is used to display warnings and in case of hardware failure, different error reports will be displayed here.

The warnings are:

BAT **L**ow battery voltage (becomes active < 10,5V)

At transmission

A-match Bad antenna match or defective antenna.

Also while transmitting the TX-flag (left top) will change to:

Te if transmission time has exceeded (> 2 minutes).

All other reports starting with Er_…. Indicating a major hardware failure and consequently the radio has to be returned to the factory.

4.6.3 Optical side tone

Especially when used in gliders, where headsets are generally not worn and thus no side tone is heard, it is very helpful to see if the microphone is operating properly.

At left lower side, there is a modulation indicator that depicts the voice level. When there is no modulation it becomes a small dot approximately in the centre.

Also if it lays far off centre, it indicates that there is bad antenna matching.

4.7 Resetting to factory settings

Returning to the factory settings can only be initiated during power-up.

To do this, during power-up the MEM and DUAL buttons must be pressed simultaneously and the display will show “SET DEFAULTS”. When the buttons are released the resetting to the factory settings takes place. When resetting is completed “DONE” is displayed.

4.8 SET UP - Menu

During power-up the MEM button must be pressed.

The message "protect mode" is displayed, just wait until it changes.

There are two functions available within the Set-up menu:

- ERASE – Erasing of the favorites (frequency and identifier)
- Channel Spacing – 25kHz / 8,33kHz

Programming of the Set-up is done with the lower 3 buttons next to the symbols (Exit, S, E). Their function is described on the display.

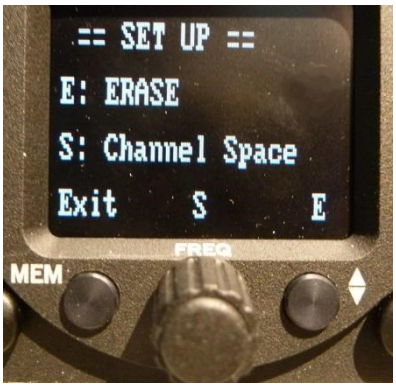

To exit the SET-UP menu, use the MEM button. The unit remains powered and the normal operating mode is resumed.

4.8.1 ERASE – erasing of favourites list

When in the SET UP – Menu select the “ERASE“ sub-menu with the buttons next to the symbols (Exit, Y).

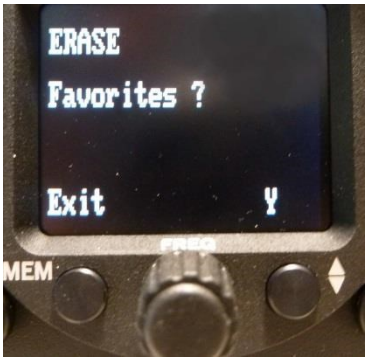

Erasing the favourites (frequency and identifier) starts after the button has been pressed again. This procedure may last a few minutes during which time the message “ERASING“ is displayed.

All INFO frequencies and identifiers that were stored on delivery are lost and all favourite index positions (01 to 99) are available to the user.

4.8.2 Channel spacing

When in the SET UP – Menu pressing the FREQ (S) button will change the KRT2 into the Channel Space submenu.

The desired channel spacing then can be selected and the (X) then indicates the actual channel spacing.

5. Remote Control

Tandem-seat airplanes can be equipped with the KRT2RC Remote Control Unit. The remote control unit is connected to RS232 serial interface and enables selection of the most common settings like frequency, volume, squelch, VOX, display contrast and brightness. In addition the unit has an independent memory for the favourites (frequency and identifier).

Transmission error messages are displayed in the error window in the third line:

- R_Time = Time-out transmission error
- R_ChkS = Checksum error
- R_Cmd = Unknown command
- R_Char = Data error
- R_Freq = Wrong Frequency

The error message disappears when a valid command or a new frequency has been input, or after 5 seconds.

Remote control unit errors do not interfere with the KRT2 transceiver operation.

Data transmission between the transceiver KRT2 and the remote control unit (KRT2-RC) is checked once a minute. An “r” in the upper right corner is displayed when there is no malfunction.

The KRT2-RC can also operate the KRT2 in a fully stand-alone mode such and allow the KRT2 to be installed anywhere in the aircraft, and be operated remotely by the KRT2C. This feature will be useful in tandem aircraft, or aircrafts with very little space behind the instrument panel.

6. Installation

6.1 Installation hints

The following hints should be considered for installation.

A certified maintenance shop should perform the installation and wiring (or as required by local national regulations). For the wiring diagram refer to chapter “6.8 Wiring”.

The KRT2 is designed as a single block unit for the installation in cockpit environment of general aviation aircrafts under consideration of the following limitations:

- Installations are to be made in accordance with appropriate EASA or FAA approved guidelines.
- The equipment must be connected to a VHF antenna in order to satisfy FAA TSO-C169a.
- The conditions and tests for ETSO/TSO approval of this article are minimum performance standards. Those installing this article, on or in a specific type or class of aircraft, must determine that the aircraft installation conditions are within the ETSO/TSO standards. ETSO/TSO articles must have separate approval for installation in an aircraft. The article may be installed only according to 14 CFR part 43 or the applicable airworthiness requirements.
- The development assurance level for the software (refer chapter “2.3. Quantitative Safety Objective Identification”) is appropriate for the type of aircraft. By this, the installation is limited to Part 23 Class 1 and Class 2 airplanes per AC23.1309-1D.
- The environmental conditions at the place, where the equipment is installed, are inside the limits of the performed environmental qualification (refer chapter “8.2 Technical Data”).
- The equipment classes (refer chapter “8.2 Technical Data”) are appropriate for the type of aircraft.
- The equipment is not intended to be installed in areas where fluid contamination could be commonly encountered.

6.2 Telecommunication data

The following data may be required for the radio station license application.

Manufacturer	TQ-Systems GmbH
Type	KRT2
EASA Authorisation Number	EASA.21O.10063547
Part Number	P/N 285942-XX(XX)-XX(XX) KRT2-S P/N 285945-XX(XX)-XX(XX) KRT2-L P/N 286048-XX(XX)-XX(XX) KRT2-P P/N 285946-XX(XX)-XX(XX) KRT2RC
Power Output	6 W
Frequency:	117.975 – 137.000 MHz
Emission Identifier:	6k00A3E for 25khz channel spacing 5k00A3E for 8,33kHz channel spacing

Table 9: Telecommunication data

6.3 FCC related issues

6.3.1 Radiofrequency radiation exposure Information:

This transceiver complies with FCC radiation exposure limits set forth for an uncontrolled environment. This transceiver should be installed and operated with minimum distance of 20 cm between the radiator and your body.

This transmitter must not be co-located or operating in conjunction with any other antenna or transmitter.

6.3.2 Note:

This transceiver has been tested and found to comply with the limits for a Class B digital device, pursuant to Part 15 of the FCC Rules. These limits are designed to provide reasonable protection against harmful interference in a residential installation. This transceiver generates, uses and can radiate radio frequency energy and, if not installed and used in accordance with the instructions, may cause harmful interference to radio communications. However, there is no guarantee that interference will not occur in a particular installation. If this equipment does cause harmful interference to radio or television reception, which can be determined by turning the equipment off and on, the user is encouraged to try to correct the interference by one or more of the following measures:

- Reorient or relocate the receiving antenna.
- Increase the separation between the equipment and receiver.
- Connect the equipment into an outlet on a circuit different from that to which the receiver is connected.
- Consult the dealer or an experienced radio/TV technician for help.

6.3.3 Compliance

Notice: This device complies with Part 15 of the FCC Rules and with Industry Canada licence-exempt RSS standard(s).

Operation is subject to the following two conditions:

(1) this transceiver may not cause harmful interference, and

(2) this transceiver must accept any interference received, including interference that may cause undesired operation.

6.3.4 Modifications

Notice: Changes or modifications made to this transceiver not expressly approved by TQ-Systems GmbH may void the FCC authorization to operate this equipment.

6.4 Scope of delivery

Part Number	Description
KRT2	KRT2 - VHF Transceiver
ZUB2 (4 pcs)	Mounting screw KRT2 - for panels up to 3mm
-	EASA Form 1

Table 10: Scope of delivery

The actual revision of the Operation and Installation manual can be downloaded on the TQ-Avionics website: www.tq-avionics.com

6.5 Unpacking and inspecting the equipment

Carefully unpack the equipment. Damages due to transportation must immediately be reported to the shipping company. Save the shipping container and all packing material to substantiate your claim.

	For storage or reshipment the original packing material should be used.

6.6 Mounting

- In cooperation with the maintenance shop, mounting details are specified. The maintenance shop can manufacture and install all cables that may be required.
- Avoid installing the unit in the vicinity of heat sources. Sufficient air circulation is required.
- There must be sufficient space for cables and connectors.
- Avoid sharp bends and wiring close to control cables.
- Cable length must be such that connectors are accessible for repair.
- The wiring to the transceiver must be installed such that water droplets formed by condensation will not run into the connector.
- Remove the turning knob in order to install the transceiver:
  - Remove the turning knob cap with an appropriate tool.
  - Loosen the screw and remove the turning knob.
  - Install cap correctly oriented
- Installation is from the front side of the instrument panel with four 4mm screws in a panel cut-out as indicated in “6.8.4 Wiring Diagram”.
- For installation details and drawings refer to chapter “6.8.4 Wiring Diagram”.

6.7 Electrical connections

The 15-pin D-Sub connector contains all electrical connections except the antenna.

	The battery plus connection must be protected with at least 3-amps slow blow fuse!

6.7.1 Microphone connection

Both the L (left) and R (right) microphone input channels can either be connected to standard microphones (standard signal level 1Vpp) or to dynamic microphones (standard signal level 5mV to 10mV). Input R has less sensitivity (30mV).

For standard microphones a supply voltage of 8V at 330Ω is provided.

Elementary Electret microphones can also be connected. They have considerably lower signal levels and therefore require an 8V supply voltage.

The microphone input channel amplifier gain can be selected via the MIC-Setup menu “4.4.11 MIC – Setup”.

When dynamic microphones are used in gliders the 8V supply voltage is switched off for power saving purposes.

Standard microphones normally used as in headsets, together with dynamic microphones generally cannot be used at the same time, but instead alternatively. If input R is not used it should be loaded or grounded and not be left unconnected.

Motor gliders should have a toggle switch installed to differentiate between motor less flight with dynamic microphones and powered flight with headsets.

When the AUTO mode is selected in the MIC-Setup menu the KRT2 automatically recognizes on MIC-L (pin 3) which microphone type has been switched and acts accordingly.

Both inputs (L and R) must not be wired together. L is the master input.

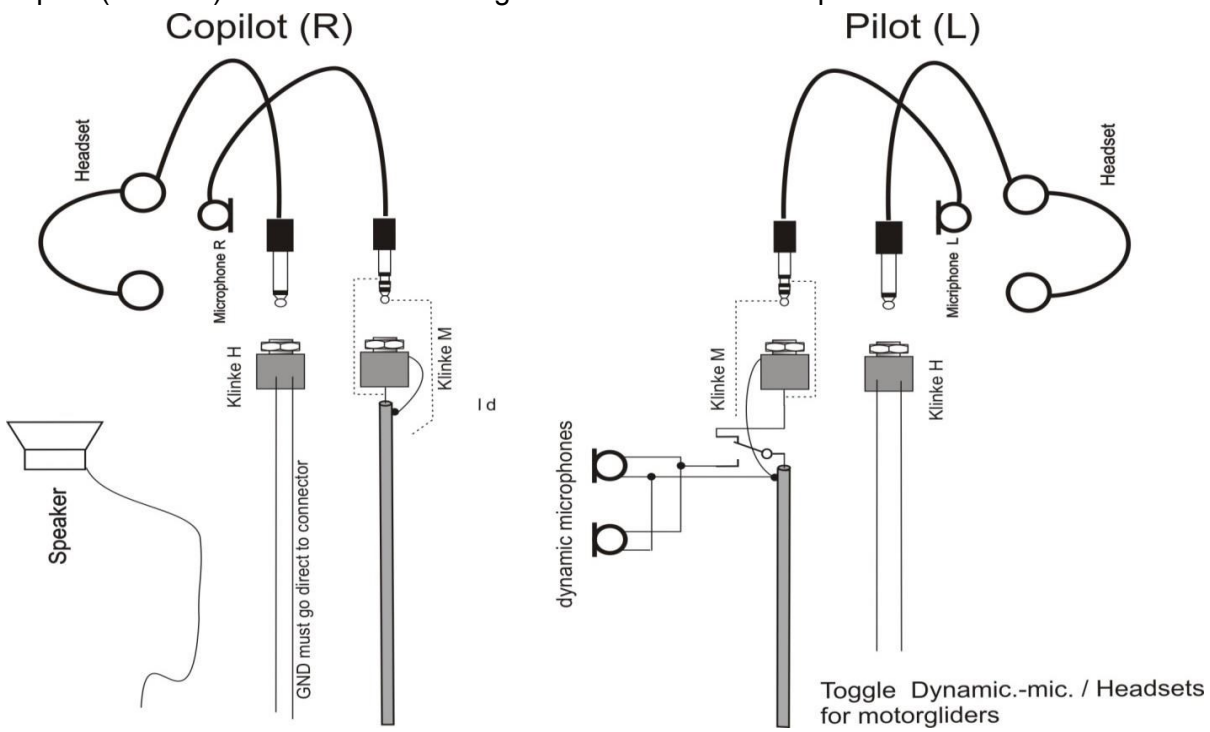

Figure 6: Headsets

Because the 8V supply voltage is switched off when dynamic microphones are used during glider flight the second (co-pilot) headset microphone is disabled.

A maximum of two microphones of same type may be connected to each microphone input channel. Standard microphones have a large difference in power consumption; therefore different models must not be mounted in parallel.

6.7.2 Speaker & open microphone:

An installation with open microphone together with a speaker and intercom is not possible.
Running a speaker together with an open microphone (goose neck) the Intercom operation hast to be turned off by setting VOX=10 or opening the intercom switch (indicating “e”) otherwise a feedback from the speaker will occur.

6.7.3 Earphone connection

Several earphones of same type can be connected in parallel. The total impedance should not be less than 60 Ohms.

6.7.4 External audio input

Audio alarms can be made available via the external audio input. When this input is not used it must be connected to ground in order to avoid noise. PIN5 must be connected to ground (GND).

6.7.5 Speaker connection

The high output power for the speaker requires a differential interconnection.

Obey:

This does not allow for one side of the speaker wires to be grounded. Both the wires have to be installed fully insulated.

Special intention has to be paid off at gliders after retrofitting on older installations. Check with a meter the resistance between one of the speaker wire and the case of KRT-2, it should be at high impedance.

After turn on it will appear this warning on the screen in case the speaker is grounded.

Running under that condition may cause a defect.

6.8 Final audio setup

This is an overview for a correct audio set up depending on the usage. Ground the unused MIC.-R input if unused.

6.8.1 For glider flights

- Press button AUD 2x for VOX: Set to VOX 10 (turn off) or open the intercom switch (indicating “e”).
- Press button AUD 3x for TXm: Set to TXm**.
- Press button AUD 5x for EXT: Set to EXT 00 (turn off).

For dynamic microphones:

- Press button AUD 9x for MIC: Set to MIC-L to Level 11.
- Press button AUD 8x for SITxx: Set to SIT01 (turn to min.).

For Electret microphones:

- Press button AUD 9x for MIC: Set to MIC-L to a level (3 to 10) so that indication is just exceeding half the maximum value.
- Leave the menu in position “L” (not AUTO).

6.8.2 For motor gliders dual seaters

For change mode (motoring & headset – gliding & dynamic microphone)

- Press button AUD 2x for VOX: Set to VOX 3. on condition for motoring.
- Press button AUD 3x for TXm: Set to TXm**.
- Press button AUD 5x for EXT: Set to EXT 00 (turn off), or on condition.
- Press button AUD 9x for MIC:
    - Set MIC-L to level 5 or as required
    - Set MC-R as required or to 1 if unused
    - Select AUTO and leave menu.

6.8.3 For motor planes

- Press button AUD 2x for VOX: Set to VOX 3 (turn off).
- Press button AUD 3x for TXm: Set to TXm**, or on condition.
- Press button AUD 5x for EXT: Set to EXT 00 (turn off), or on condition.
- Press button AUD 9x for MIC:
    - Set to MIC-Level 3 or as required
    - Set MC-R as required or to 1 if unused.
- Leave the menu in position “L” (not AUTO).

6.9 Wiring

6.9.1 Wire Gauges

Supply lines (Power, GND): AWG20 (0,61 mm²)
Control lines: AWG22 (0,38 mm²)
All wires must be aviation certified.

6.9.2 Connector Pin-Configuration

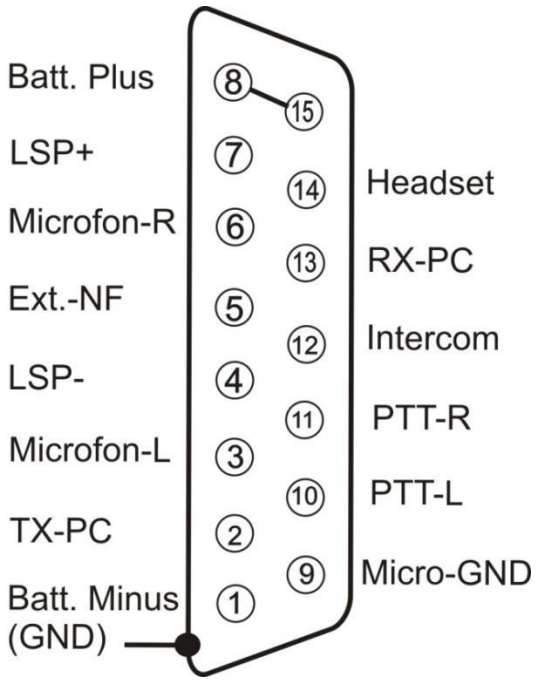

Figure 7: Connector pinout

	If manual intercom is not used, pin 12 should be grounded (Batt. Minus).

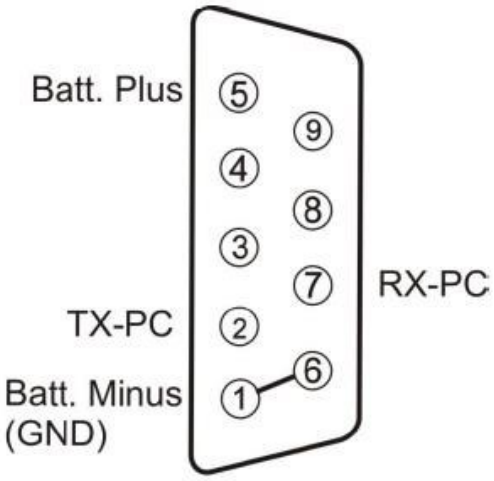

Figure 8: Remote control pinout

The nine pins connector on the KRT2RC is used for the connection to the KRT2.

6.9.3 General hint

The following drawings are not covering all possible configurations. There are many different microphones with sometimes incompatible performances on the marked.

It is recommended to use Electret Microphones providing a standard output level.

6.9.4 Wiring diagrams

Two place motor aircraft connection

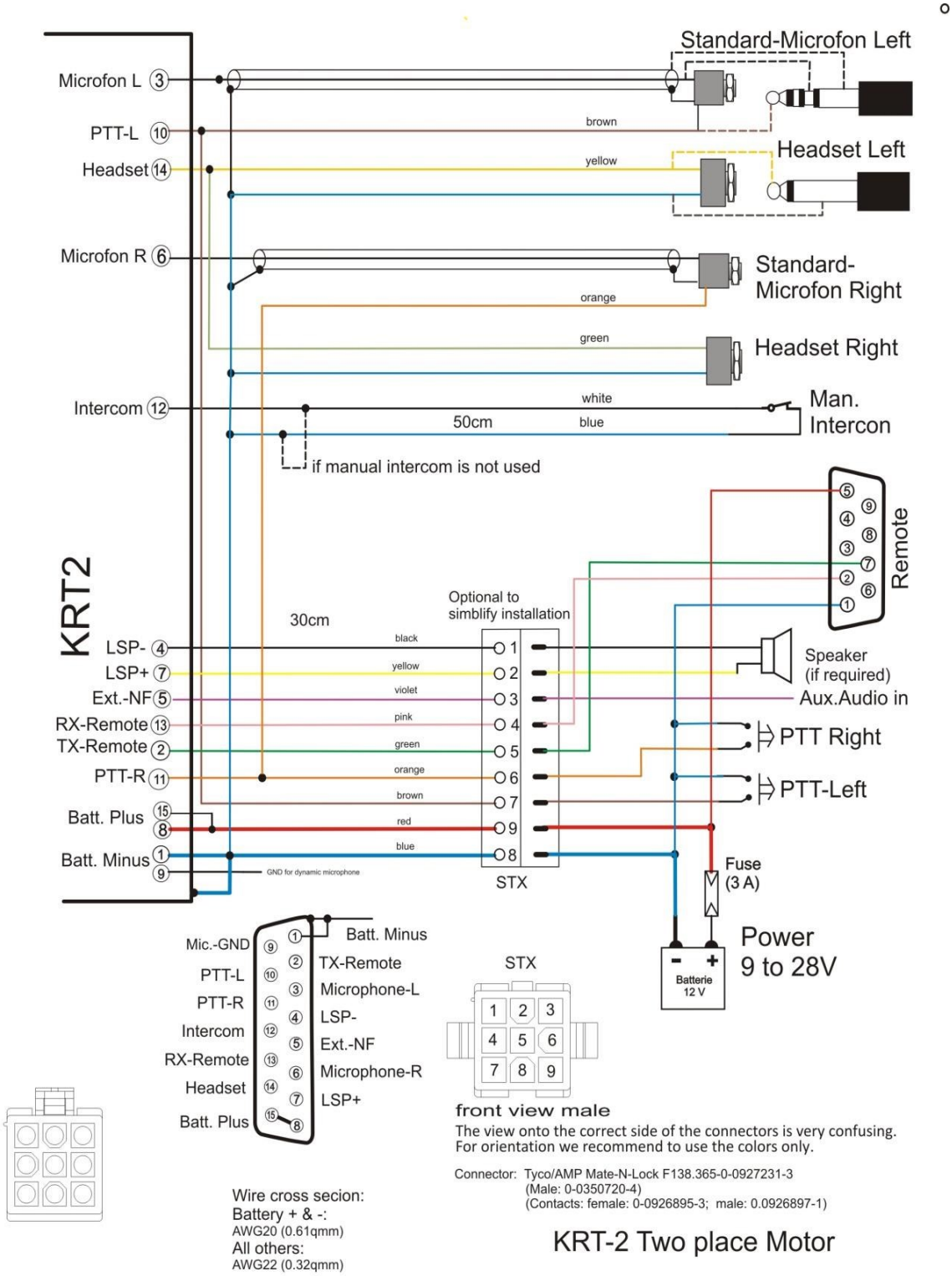

Microphone-Setup: set L / R as required for headset, do not leave in AUTO

Glider two place connection

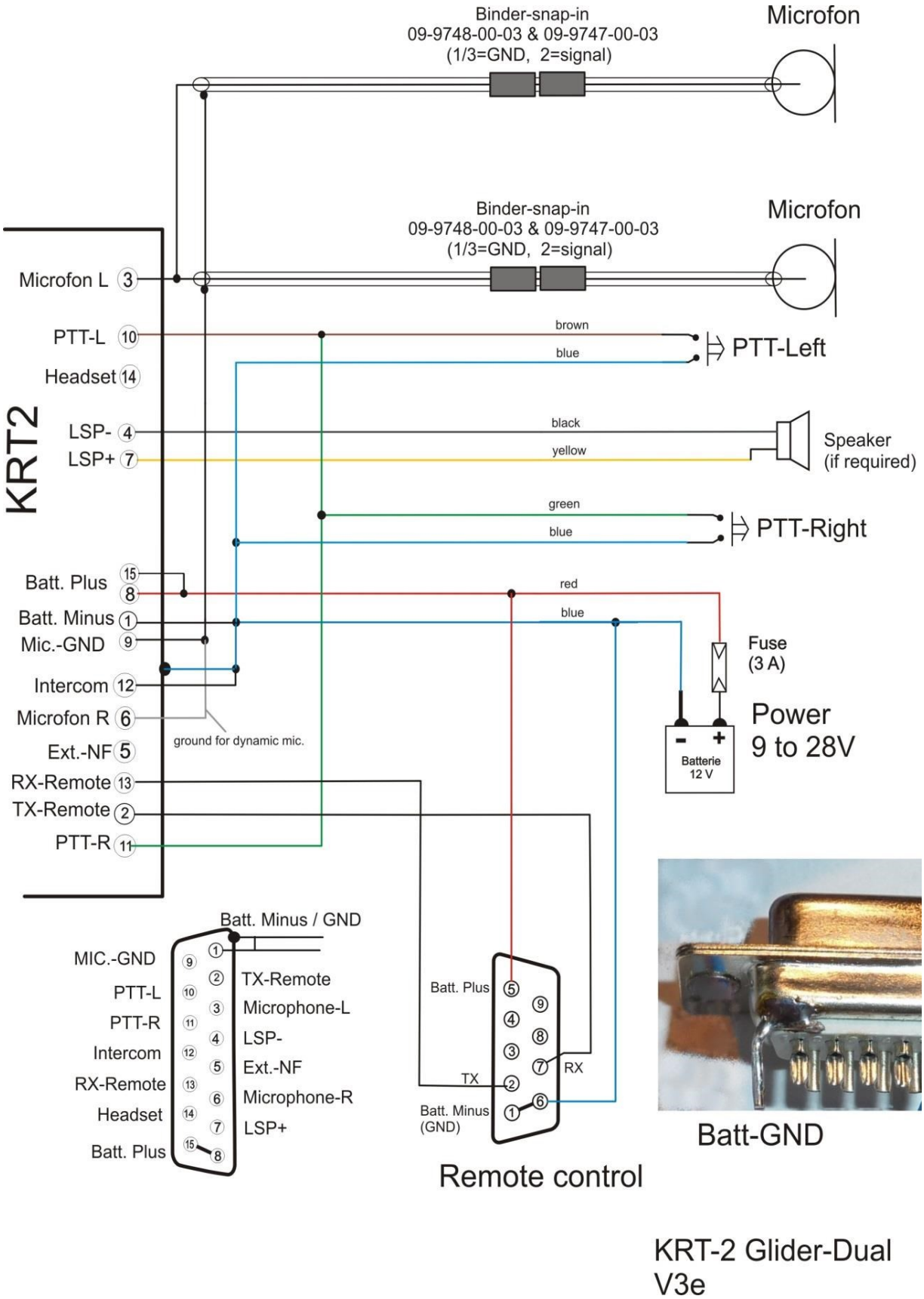

Microphone-Setup: leave in L =11, (not AUTO)

Glider single

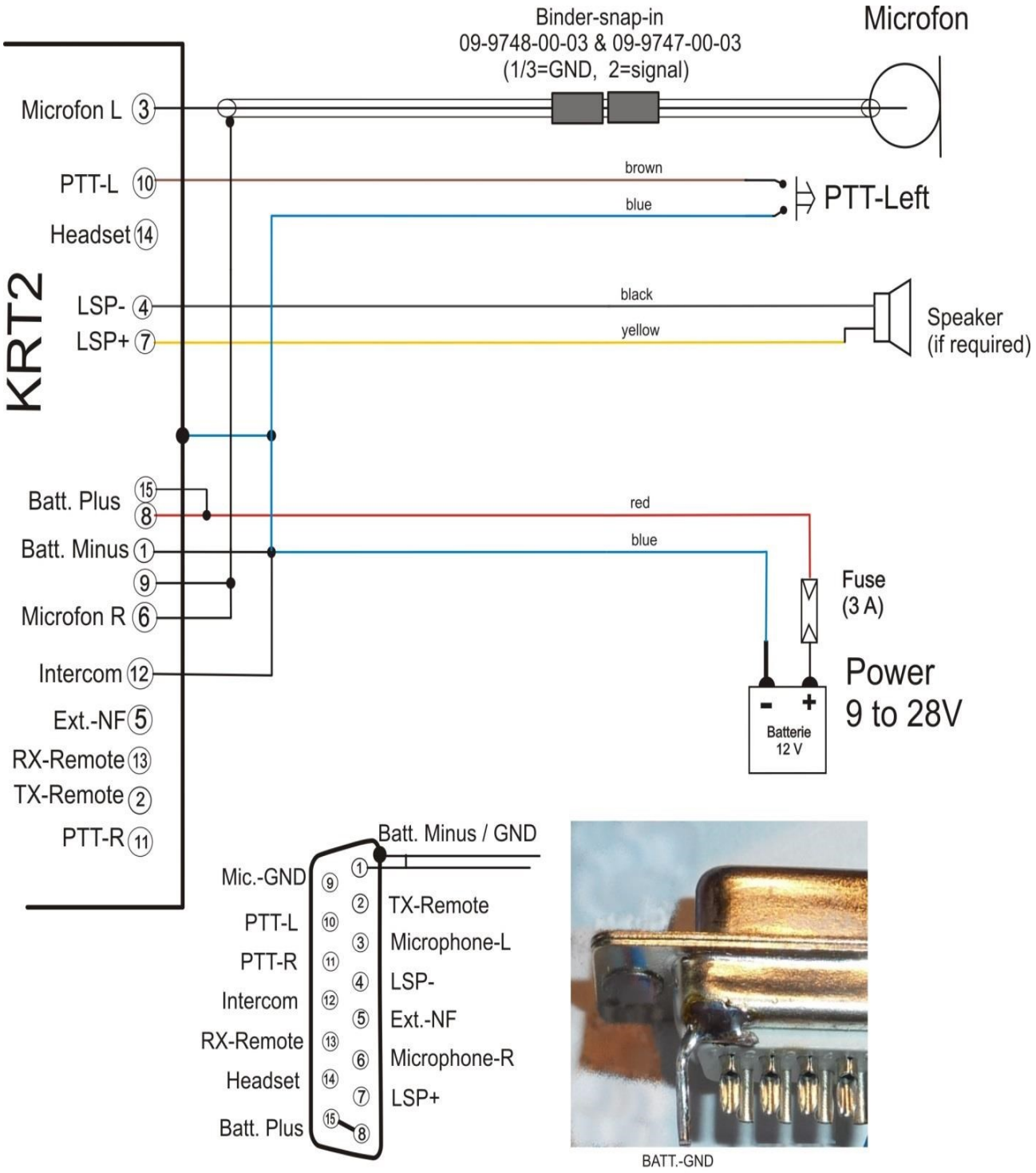

KRT-2 Glider-Single
V4c

Microphone-Setup: leave with L =11 for dynamic, (not AUTO)

Motor glider single

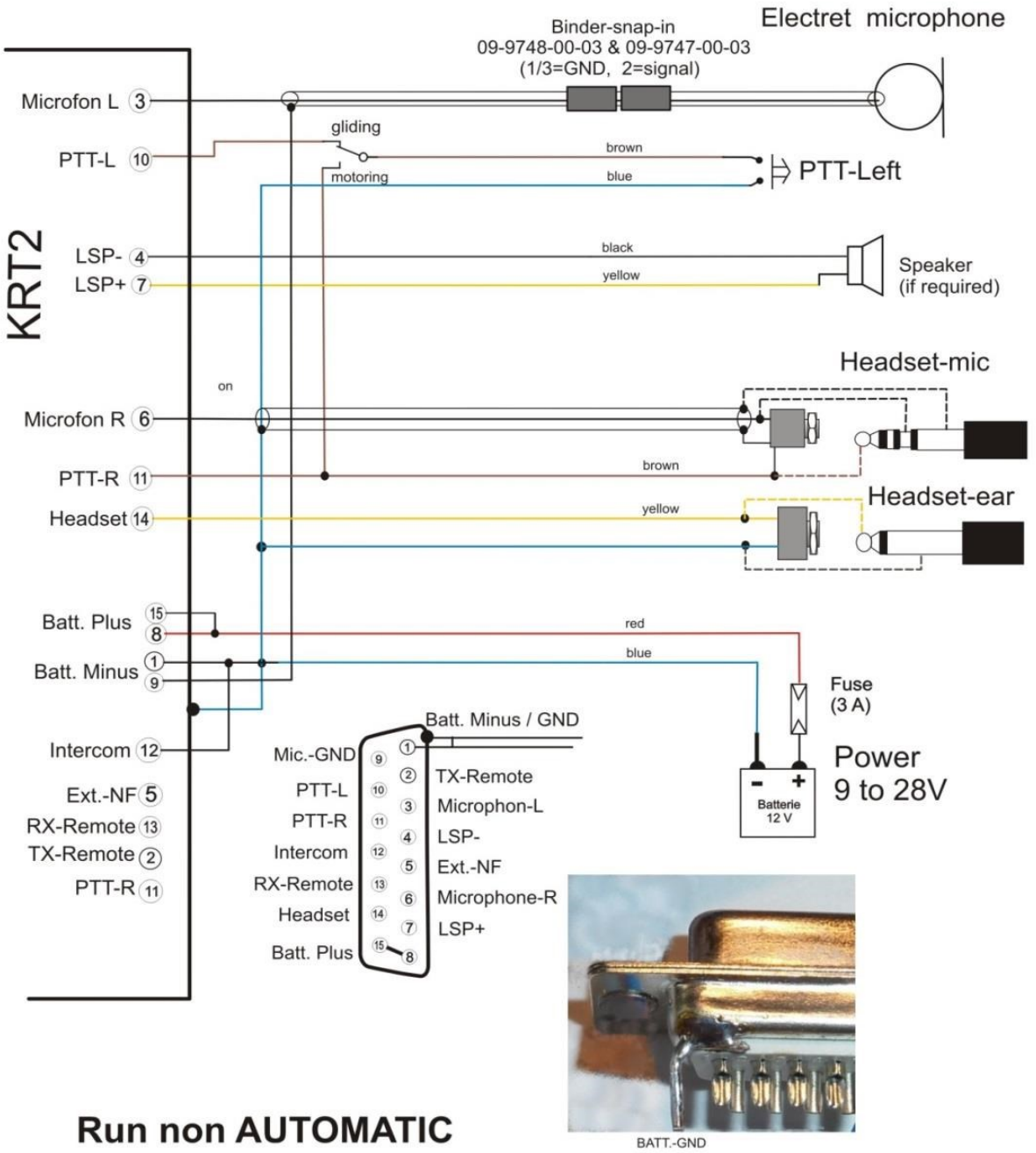

KRT-2 Motorglider-Single
PTT-Select.

Microphone-Setup:

For Electret set L / R as required for headset, do not leave in AUTO-mode.

For Dynamic, use a switch to cut off the dynamic mic. (If motoring) and leave setup in AUTO-mode, wire PTT-L and PTT-R in parallel.

Motor glider dual-Dynamic Microphone

Dynamic Microphone

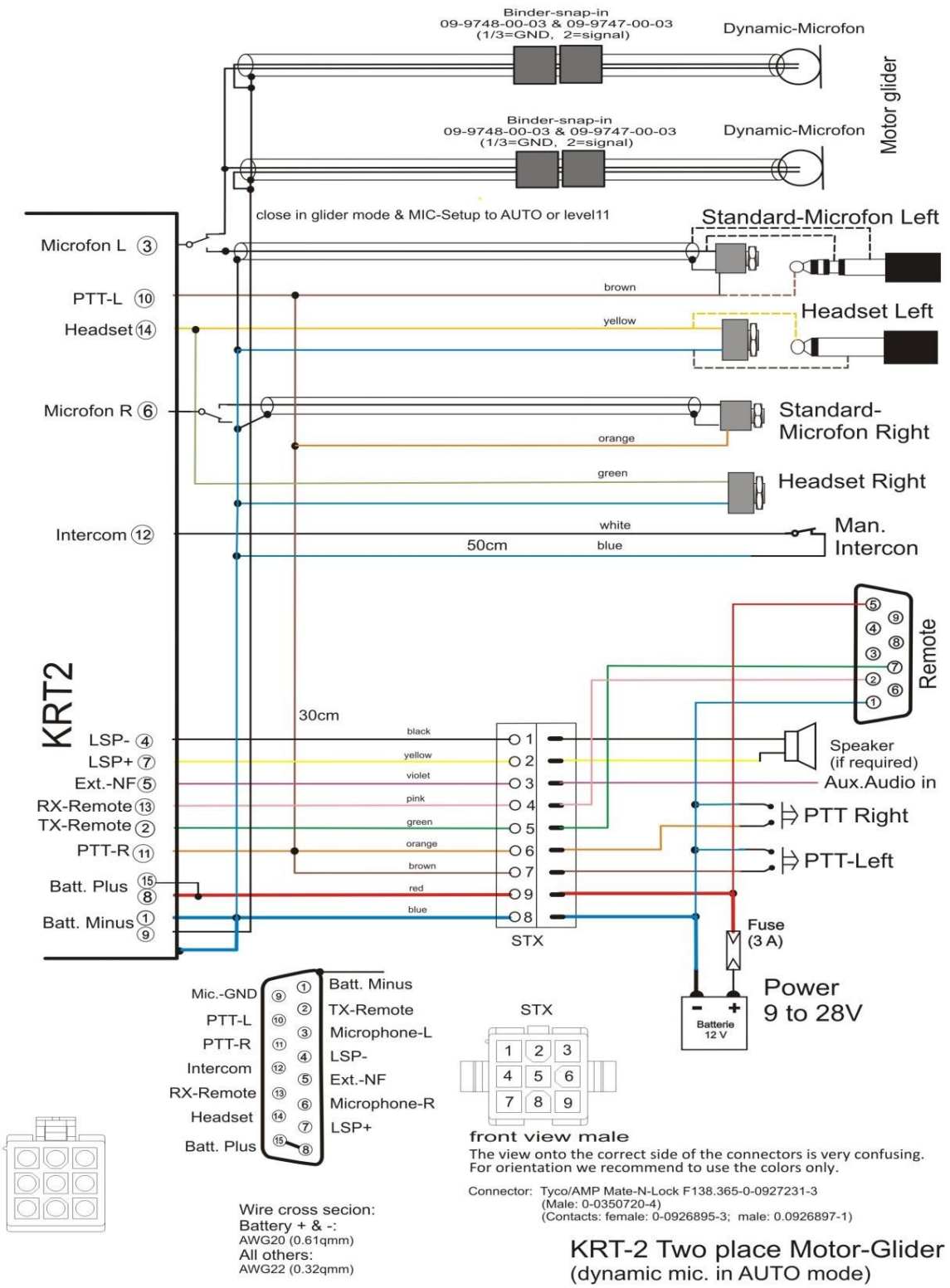

Microphone-Setup: R for headsets, leave menu in AUTO mode.

Motor glider dual-Electret Microphone

Electret Microphone

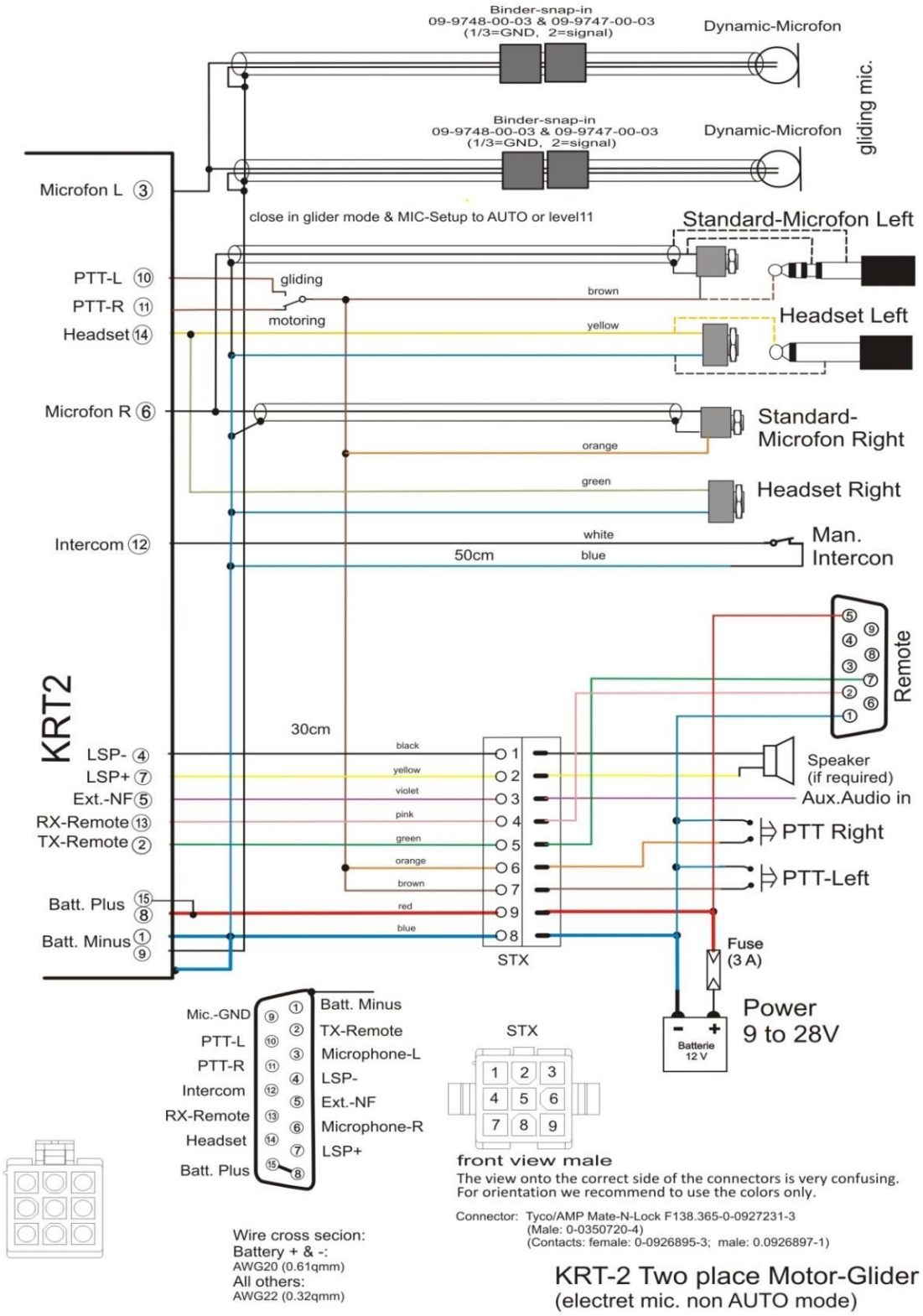

Microphone-Setup: leave L = 3..9 (in case of dynamic =11), R=3 (not AUTO-mode).

6.9.5 Wiring for dynamic microphones

Special attention is required for the wiring for dynamic microphones. Because of the required high gain any mistake on the ground wiring leads to interferences and feed-backs.

The basic rules are:

	Never connect the power current grounds with the microphone ground.

- The cleanest GND is the case of the radio.
- Connect the battery-GND to the case and pin 1 and the microphone GND to the pin 9 only (standard allocation).

6.9.6 Connection support ST1 mating connector

In order to get clean cable shields connections, and to avoid ground loops an adapter board as shown is recommended.

The adapter board is placed between the connector pin rows and soldered to GND pins 1 and frame.

Pin 9 (microphone-GND) has its dedicated connections for shielding.

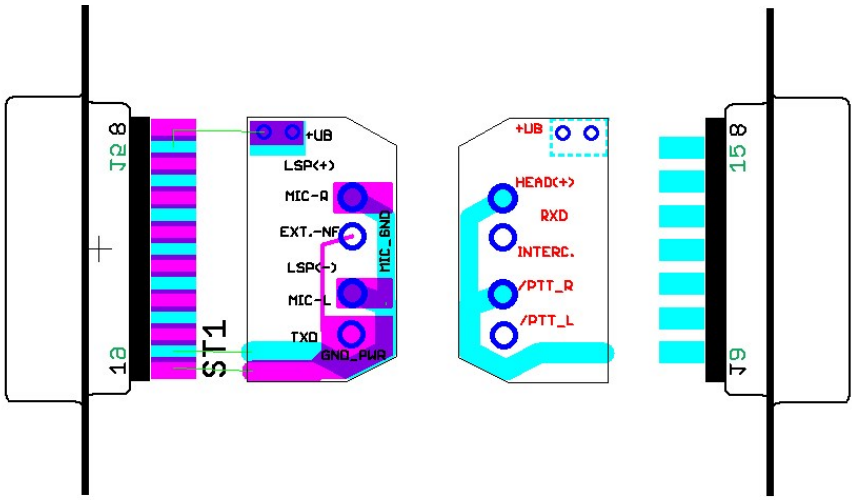

Figure 9: KRT2 connection support layout 1

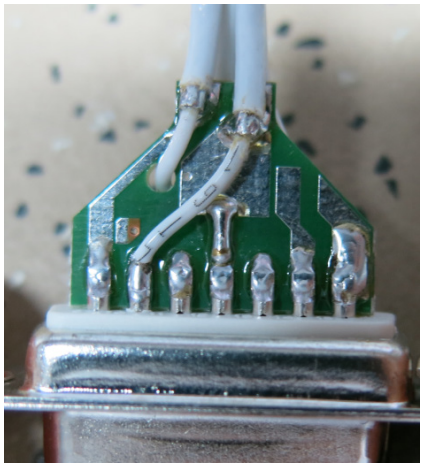	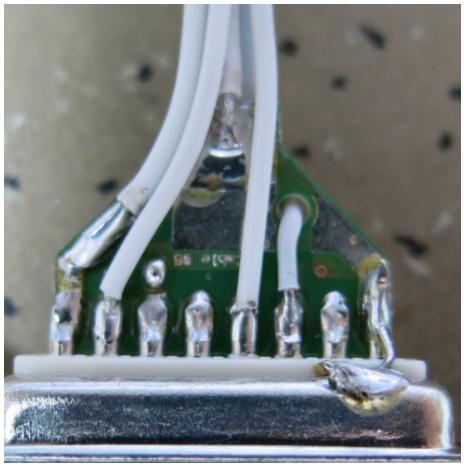
From left to right: Pin 9: GND Mikrofon Pin 10: PTT-L Pin 11: PTT-R Pin 12: Intercom with Bridge to Gnd Pin 13: RX Pin 14: Headset Pin 15: connected with Pin 8 Batterie+	From left to right: Pin 8: Batterie plus Pin 7: Speaker + Pin 6: Mikrofon R Pin 5: Ext. NF Pin 4: Speaker minus (not GND) Pin 3: Mikrofon L Pin 2: TX Remote Pin 1: Batterie – GND

Figure 10: KRT2 connection support layout 2

6.10 Antenna

6.10.1 Antenna selection

- A 50 Ohms impedance VHF-COM-antenna is required.
- The antenna must be approved in respect to aircraft type and installation location.
- The antenna specifications can only be fulfilled when properly installed

6.10.2 Installation recommendation

- The manufactures instructions have to be observed.
- The metallic contact between airplane surface and antenna ground must be very good. Non-metallic airplanes must have installed a metal sheet, foil or mesh of at least 80×80 cm inside the fuselage as electric counterweight.
- In order to avoid interference the distance between a COM an NAV antenna or between a COM and another COM antenna should be as large as possible. A distance of 2 metres is normally sufficient.
- The antenna must be installed vertically and as far as possible from parts like propeller, landing-gear, rudder etc., that may influence propagation of the radio signals.
- In gliders the internal antenna provided by the airplane manufacturer is to be used.

	The RF-antenna cable may not be part of other cable sets like power-supply or microphone. It must not be placed together with any other COM, NAV or transponder antenna cable. THIS IS VERY IMPORTANT

6.11 Microphone general

The correct setting of the MIC and VOX values is of great importance for the Intercom system (see “4.4.3 VOX – Intercom Voice Trigger Level Setting” and “4.4.11 MIC – Setup”).

The VOX intercom voice trigger level must be set to such a value that the intercom system is activated when speaking at a normal voice level into the microphone. It should be set so that it is not triggered by normal cockpit noise.

In addition, VOX should be set to level 01 and the intercom switch permanently enabled.

The manual intercom operation is possible with one or two separate, optional parallel connected intercom switches. These switches are not the

PTT switches. The intercom switches connect pin12 (intercom) with GND (pin1).

The intercom-deactivation will be indicated with “e” if pin12 is not on GND.

The intercom requires the connection pin 12 to GND either permanently or through the intercom switches.

Cockpit noise suppression is only possible with differential microphones used in modern headsets. Normal electrical microphones are not suitable.

6.12 Post-Installation Check

	A certified maintenance shop must verify the proper operation of the VHF transceiver or as required by national regulations.

A complete check of all airplane systems is required to certify that the new wiring is not causing any malfunction.

The standing wave ratio (SWR) must be less than 3:1.

A test flight is recommended to verify proper transceiver operation. The following items should be checked:

- Check transceiver operation with a radio station at least 50 km away when at 2000ft or above.
- Check if there is unusual electrical interference or noise.
- If possible check the transceiver operation on low and high frequencies of the VHF frequency band.

6.13 Starting Up

Switch the unit on with the ON button.
The following display will appear:

The start display shows device type and the software number. It then changes into the normal operating mode (Direct Input).

6.14 Accessories

Suitable accessories such as antennas, cable sets, and switches can be purchased at our online shop on www.tq-avionics.com or from other avionics suppliers.

6.15 Drawings

6.15.1 Dimensions

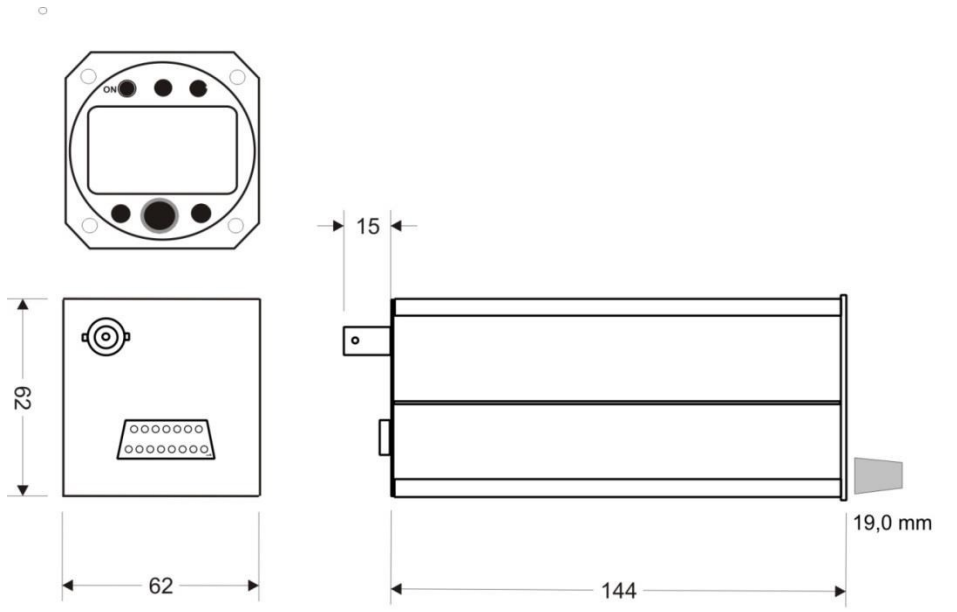

Figure 11: KRT2-S Dimensions

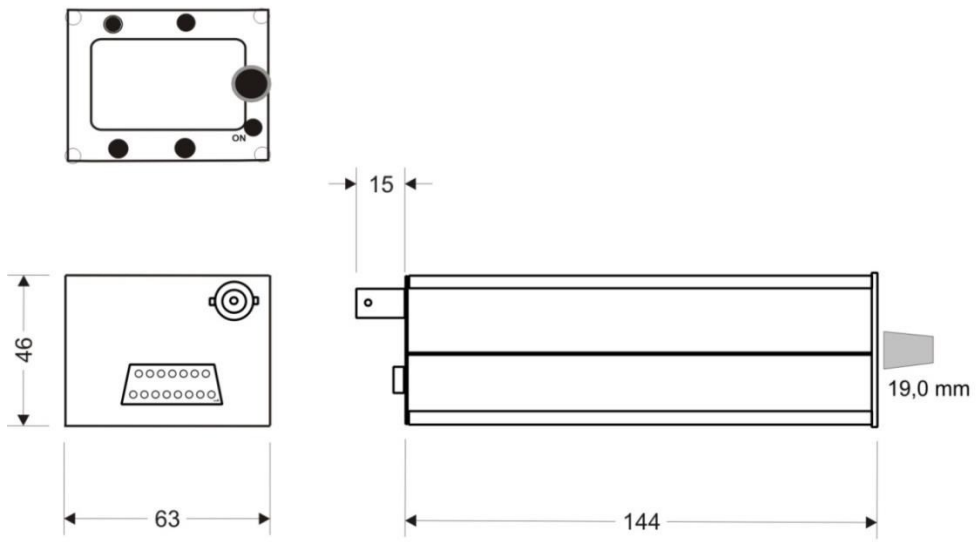

Figure 12: KRT2-P, KRT2-L dimensions

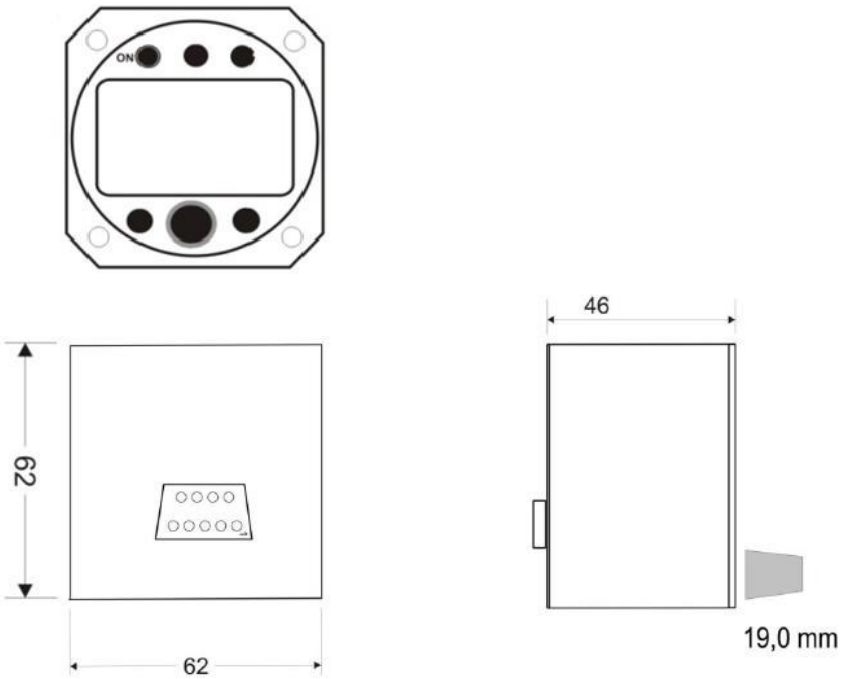

Figure 13: KRT2-RC remote control dimensions

6.15.2 Installation directions

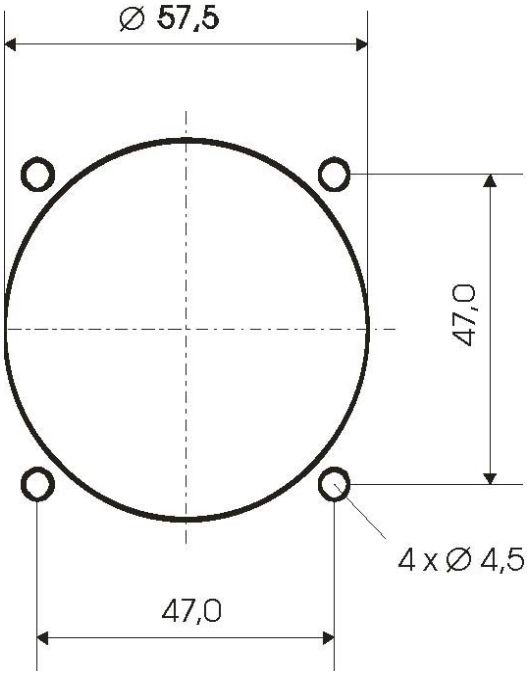

Figure 14: KRT2-S panel cutout

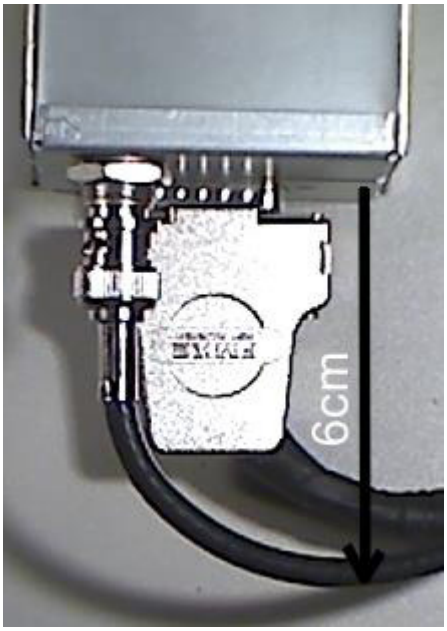

Required space for connectors

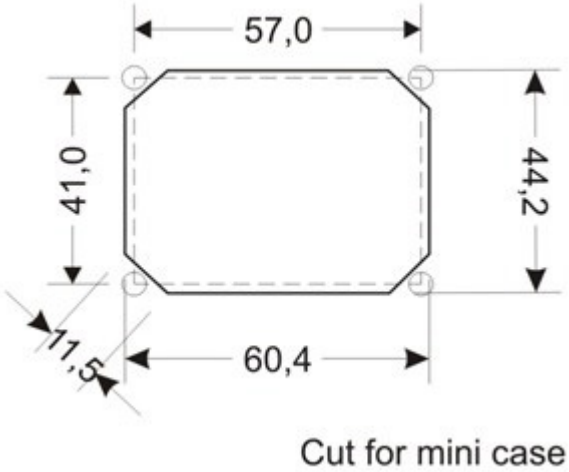

Figure 15: KRT2-P, KRT2-L panel cutout

7. Maintenance

7.1 Periodic Maintenance

The KRT2 VHF Com Transceiver has been designed and manufactured to allow “on condition maintenance”. This means that there are no periodic service requirements necessary to maintain continued airworthiness, and no maintenance is required as long as it does properly perform its intended function. When service is required, a complete performance test shall be accomplished following any repair action. Repairs shall only be carried out in accordance with TQ-Systems GmbH service procedure.

7.2 Repair

In case of equipment malfunction, the unit must be sent to the manufacturer. Refer to section “1.2 Customer Service”.

7.3 Cleaning

Clean the display only with, lint-free cloth and an eyeglass lens cleaner that is specified as safe for anti-reflective coatings.

8. ANNEX

8.1 Frequency / channel - schedule

The following table contains the operating and displayed frequencies between 118.000 and 118.100MHz. The table can be continued up to 137.000 MHz following the same principle.

Operating frequency (MHz)	Cannel Spacing (kHz)	Displayed channel 8.33/25 kHz Mode	Displayed Channel 25 kHz Mode
118.0000	25	**118.000**	**118.000**
118.0000	8.33	118.005	
118.0083	8.33	118.010	
118.0166	8.33	118.015	
118.0250	25	**118.025**	**118.025**
118.0250	8.33	118.030	
118.0333	8.33	118.035	
118.0416	8.33	118.040	
118.0500	25	**118.050**	**118.050**
118.0500	8.33	118.055	
118.0583	8.33	118.060	
118.0666	8.33	118.065	
118.0750	25	**118.075**	**118.075**
118.0750	8.33	118.080	
118.0833	8.33	118.085	
118.0916	8.33	118.090	
118.1000	25	**118.100**	**118.100**
118.1000	8.33	118.105	
etc.	etc.	etc.	etc.

Table 11: Frequencies

8.2 Technical Data

GENERAL	
Approval Number	EASA.21O.10063547
Compliance Standards	ETSO-2C169a / TSO-C169a Transmitter: ED-23C Class 4,6 / DO-186B, Class 4,6 Receiver: ED-23C Class C-D-E-H1/2 / DO-186B, Class C-D-E
Standards	RTCA DO-186B / EUROCAE ED-23C RTCA DO-160F / EUROCAE ED14F RTCA DO-178C / EUROCAE ED12C, Software Level D
FCC ID	2ANFFKRT2
Dimensions 57mm-case	Height: 62mm, Width: 62 mm, Depth: 146mm plus rear panel plugs 60mm
Dimensions Portrait	Height: 64mm, Width: 46 mm, Depth: 150mm plus rear panel plugs 60mm
Dimensions Landscape	Height: 46mm, Width: 64 mm, Depth: 150mm plus rear panel plugs 60mm
Weights: 57mm Portrait / Landscape	 approx. 0.36 kg approx. 0.34 kg
Mounting	Panel mounting, cut-out Ø 57 mm or figure KRT2-L /-P panel cut out
Temperature Ranges Operation Storage	 -20 °C to +55 °C -55 °C to +85 °C
Maximum Height	35 000ft
Vibration	DO-160F, Cat. S, Vibration Curve M
Humidity	RTCA DO-160F, Cat. A
Shock	6 G operation 20 G crash safety
RTCA DO-160F ENV. CAT.	[C4Z]CAB[SM]XXXXXXZBAB[AC]YMXXXAX
Power Supply	9 VDC to 30VDC test at 13.8VDC • Transmitter: 2.0 A (typ.) • Receiver: 0.13 A • Illumination 0.01A to 0.07A • Audio Power amp. Up to 1A emergency operation: 9 VDC
Power Consumption	Standby 1.6W, Transmit 30 W
Frequency Range	117.975 - 137.000 MHz
Frequency Stability	±5 ppm
Fuse	external fuse required: 3 A, slow-blow
Compass Safe Distance	300 mm

Table 12: Technical Data General

TRANSMITTER	
Power Output	6 W (nominal) at >13.5V 4 W (minimal)
Harmonic Distortion	<10 % at 70 % modulation
Sidetone Output	>0,5W an 300Ω (head set output)
Microphone Inputs	2 x standard (50mV…2V) into 100Ω or 2 x dynamic
Harmonic Content	> 60dBc
Modulation Fidelity	deviation <6 dB von 350…2500Hz
Carrier Noise Level	>35dB at 70% Modulation index
Unwanted Frequency Modulation	<1kHz at m=70% / 1kHz
Duty Cycle	2 minutes on, 4 minutes off; automatic turn-off after 2 minutes continuous transmitter operation

Table 13: Technical Data Transmitter

RECEIVER	
Sensitivity	-105 dBm (>6 dB S+N/N, m = 30 % / 1 kHz)
Bandwidth / 25 KHZ	-6-dB-bandwidth > ±8.0 kHz
Bandwidth / 8.33 KHZ	-6-dB-bandwidth > ±2.78 kHz
Selectivity (channel spacing 25 KHZ)	-40-dB-bandwidth < ±17.0 kHz -60-dB-bandwidth < ±22.0 kHz
Selectivity (channel spacing 8.33 KHZ)	-60-dB-bandwidth < ±7.37 kHz
Speaker Output	≥10 W into 4 Ω
AGC Characteristics	Deviation of NF-output < 6 dB from 10 µV to 10 mV
Squelch	Automatic Squelch (adjustable)
Spurious Responses	> 80 dB
Distortion (350…2500Hz)	<25% at rated power (85% / -33dBm) <10% at 10dB below rated power (70% / -33dBm)

Table 14: Technical Data Receiver